API594 Double Disc plated Dual Check Valves With Class 150, Class 300, Class600, Class900, class1500

Our Product Introduction

Basic Information

- Place of Origin: CHINA
- Brand Name: DEYE
- Certification: ISO9001:2015 PED
- Model Number: DY-V-06
- Minimum Order Quantity: 10PCS
- Price: USD2-USD20000 each
- Packaging Details: carton box+ ply wooden cases or carton+ Pallets
- Delivery Time: 20 days for usual order, 7 days for stocked items
- Payment Terms: T/T, L/C, D/P
- Supply Ability: 1000pcs one month

Product Specification

- Standard: API ASME ANSI DIN GOST
- Design: Wafer, Lug, Double Flanged
- Body: WCB, Stainless Steel, CF8, CF8M, CF3M, 4A, 5A, 6A
- Trim: CA15 Stainless Steel, Duplex Stainless Steel, Alloy 20
- Pressure: 150LBS, 300LBS M 600LBS, 900LBS ,1500LBS, PN10-PN250
- Size Range: 2"-48" DN50-DN1200
- Highlight: **Double Flanged Oil Gas Valve**, **300lbs Oil Gas Valve**, **600lbs Dual Check Valves**

for more products please visit us on piping-industry.com

for more products please visit us on piping-industry.com

Product Description

API594 Double Disc plated Dual Check Valves With Class 150, Class 300, Class600, Class900, class1500

API594 Duo check valve is a protection device that prevents the fluid from flowing in an unwanted direction within the piping system or the pipeline (as backflows may damage upstream equipment). The check valve lets the fluid flow in the desired direction only (if there is enough pressure), and blocks any flow in the opposite direction. Also, the valve closes automatically when the pressure drops. It is therefore critical that the valve is installed with a proper orientation.

Product Information/Product Description/Basis Information/Specification

Standard	BS1868 check valve BS1873/ /BS 5352 cast and forged Globe valve API600 Bolted Bonnet Steel Gate Valves for Petroleum and Natural Gas Industries API602 Forged Steel valves API603 Stainless steel valve API6D Gate valve, Plug valve and Ball valve API609 Butterfly valve API594 Wafer, Lug check valve
Types	Butterfly Valves, Ball valves, gate valves, check valves, globe valves, Plug valves, strainers
Size	1/2"-48 DN15-DN1200" globe valve is 1/2” to 16”
End Connection	Flange Ends, RF, FF, RTJ, LM, BW ends, threaded ends NPT, BSPT, BSPP, Socket Welded Ends
Pressure Range	CL150LBS, 300LBS, 600LBS, 800LBS 900LBS, 1500LBS, 2500LBS PN6 PN10 PN16 PN25 PN40. PN64 PN110, PN160, PN250, PN420
Surface	Acid pickling, Polished, Galvanized, Painting, epoxy Power Coated

Material List Grade

Main Ingredients	Standards							
	Castings				Bar or Forgings			
	ASTM	DIN (W.-Nr.)	UNS-No.	JIS	ASTM	DIN (W.-Nr.)	UNS-No.	JIS
Martenstic Stainless Steel								
13Cr-4Ni-0.8Mo	A743 CA6NM	1.4313	J91540	SCS6	A276 S41500	1.4313	S41500	
Austenitic Stainless Steel								
18Cr-8Ni 18Cr-8Ni-LS (1)	A351 CF8	1.4308	J92600	SCS13A	A276 304	1.4301	S30400	SUS 304
18Cr-8Ni-LC (2)	A351 CF3	1.4306	J92500	SCS19A	A276 304L	1.4306	S30403	SUS 304L
18Cr-9Ni-2Mo 18Cr-9Ni-2Mo-LS (1)	A351 CF8M	1.4408	J92900	SCS14A	A276 316	1.4401	S31600	SUS 316
18Cr-9Ni-2Mo-LC (2)	A351 CF3M	1.4404	J92800	SCS16A	A276 316L	1.4404	S31603	SUS 316L
18Cr-10Mi-Nb	A351 CF8C	1.4552	J92710	SCS21	A276 347	1.455	S34700	SUS 347
18Cr-12Ni-3.5Mo	A351 CG8M		J93000		A276 317	1.4449	S31700	SUS 317
18Cr-12Ni-3.5Mo-LC (2)	A351 CG3M		J92999		A276 317L	1.4438	S31703	SUS 317L
18Cr-13Ni-4.5Si								
21Cr-29Ni-2.5Mo-3.5Cu	A351 CN7M	1.4536	J95150	SCS23	A473 N08020	2.466	N08020	
21Cr-29Ni-2.7Mo-3.2Cu-LC (2)	A990 CN3MCu							
25Cr-20N	A351 CK20		J94202	SCS18	A276 310S	1.4845	S31008	SUS 310S
33Ni-20Cr-45Fe-Nbi	A351 CT15C	1.4859	N28820		B408 N08800	1.4876	N08800	NCF800
Super Austenitic Stainless Steel								
21Cr-24Ni-6.5Mo-N	A351 CN3MN				B691 N08367		N08367	SUS 836L
25Cr-24Ni-6.5Mo-N	A351 CN3MN mod.							

20Cr-18Ni-6.5Mo-N-Cu	A351 CK3MCuN		J93254		A276 S31254		S31254	
Duplex Stainless Steel								
22Cr-5Ni-3Mo-N	A995 Gr.4A CD3MN		J92205		A276 UNS32205	1.4462	S32205	SUS 329J3L
25Cr-5Ni-Mo-Cu	A890 Gr.1A CD4MCu		J93370		A790 UNS31260		S31260	
Super Duplex Stainless Steel								
25Cr-7Ni-3Mo-N				SCS10	A479 S32750	1.446	S32750	SUS 329J4L
28Cr-7Ni-4Mo-N				SCS10 mod.				
25Cr-7Ni-3Mo-Cu-N-W	A890 Gr.6A CD3MWCuN	1.4468	J93380		A479 S32750	1.446	S32750	
25Cr-7Ni-4Mo-N	A890 Gr.5A CE3MN		J93404		A479 S32750	1.446	S32750	

High Temperature Material CF8, 304, 304H CF8M, 316, 316H CK-20, 310, 310H WC4, WC5, F2, WC6, F11C1.2, F12C1.2, WC9, F22C1.3, C5, F5, WC4, WC5, F2, WC6, F11C1.2, F12C1.2, WC9, F22C1.3, C5, F5

Low Temperature Material A352 LCB, LCC, LC1 LC2, LC3, LC4, CF8M, CF8, CF3M
Alloy Material: Bronze, IN Conoy, DUPLEX SS, Alloy 20, Hastelloy C 276, Hastelloy B

Technical Pressure Test

Shell Test	1.5xworking pressure				
Seal Test	1.1x Working Pressure				
air test for seal	0.6Mpa by air				
Valve Size		Minimum Test Duration (Seconds)			
DN	NPS	Shell	Backseat (for Valves with Backseat Featu_re)	Closure Check Valves (API 594)	Closure Other Valves
≤50	≤ 2"	15	15	60	15
65 to 150	2 1/2" to 6"	60	60	60	60
200 to 300	8"-12"	120	60	120	120
≥350	≥14"	300	60	120	120
a The test duration is the period of inspection aft the valve is fully prepared and is unde full pressure.					

Maximum allowable Leakage Rates for Closure Test							
Valve Size		All Resilient Seated Valves	Metal Seated Valves Except Check		Metal Seated Check Valves		
DN (mm)	NPS		Liquid Test (drops/ minute)	Gas. Test (bubbles/ minute)	Liquid Test (cc/min)	Gas Test (m3/h)	Gas Test (ft3/h)
≤50	≤2	0	0	0	6	0.08	3
65	21/2	0	5	10	7.5	0.11	3.75
80	3	0	6	12	9	0.13	4.5
100	4	0	8	16	12	0.17	6
125	5	0	10	20	15	0.21	7.5
150	6	0	12	24	18	0.25	9
200	8	0	16	32	24	0.34	12
250	10	0	20	40	30	0.42	15
300	12	0	24	48	36	0.5	18
350	14	0	28	56	42	0.59	21
400	16	0	32	64	48	0.67	24
450	18	0	36	72	54	0.76	27
500	20	0	40	80	60	0.84	30
600	24	0	48	96	72	1.01	36
650	26	0	52	104	78	1.09	39
700	28	0	56	112	84	1.18	42
750	30	0	60	120	90	1.26	45
800	32	0	64	128	96	1.34	48
900	36	0	72	144	108	1.51	54
1000	40	0	80	160	120	1.68	60
1050	42	0	84	168	126	1.76	63
1200	48	0	96	192	144	2.02	72

a For the liquid test, 1 ml is considered equivalent to 16 drops.
b There shall be no leakage for the minimum specified test duration . For liquid test, 0 drops means no visible leakage per minimum specified test duration. For gas test, 0 bubbles means less than 1 bubble per minimum specified test duration.

Check Valves catalogue pages/Dimension List

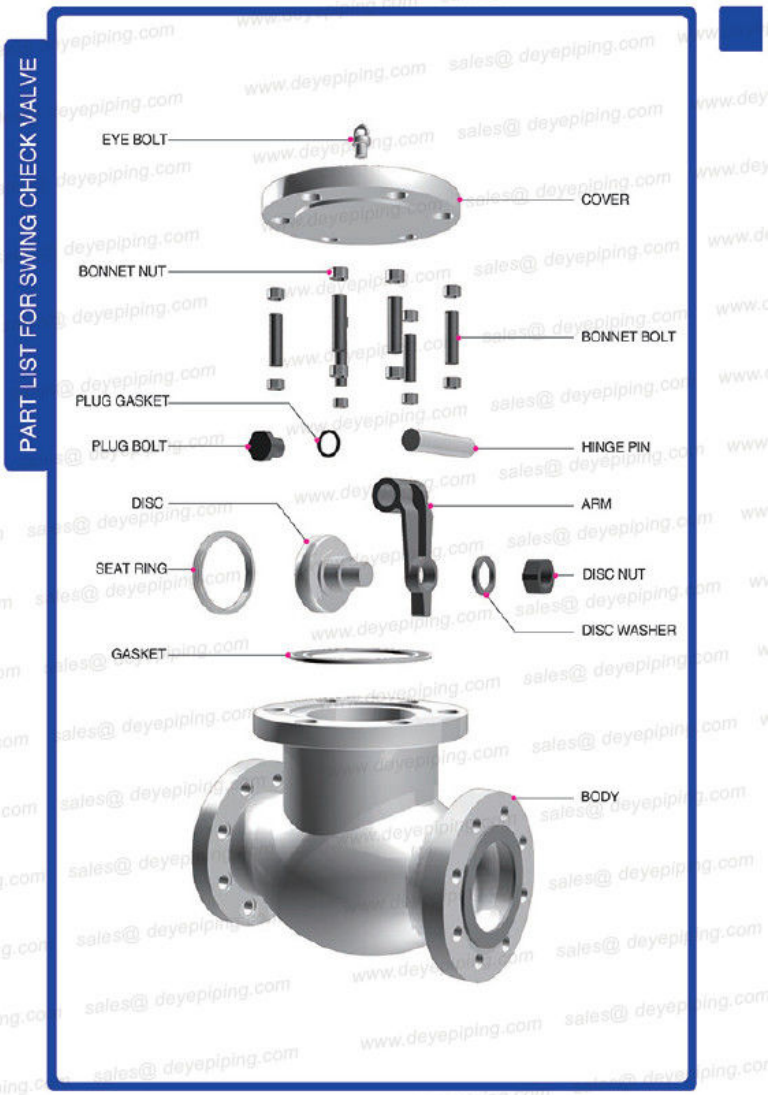

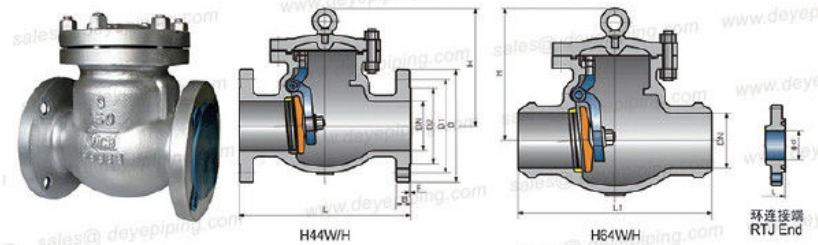

美标150Lb～300Lb旋启式止回阀 Class 150 & Class 300 Cast Steel Swing Check Valve

规格Size		Class 150						Class 300					
		尺寸Dimensions(mm)					重量 Weight (kg)	尺寸Dimensions(mm)					重量 Weight (kg)
NPS	DN	L			d	H		L			d	H	
		RF	RTJ	BW				RF	RTJ	BW			
2	50	203	216	203	51	132	15	267	283	267	51	144	18
21/2	65	216	229	216	64	147	20	292	308	292	64	169	30
3	80	241	254	241	76	176	27	318	333	318	76	210	35
4	100	292	305	292	102	198	45	356	371	356	102	260	41
5	125	330	343	330	127	255	58	400	416	400	127	295	60
6	150	356	368	356	152	320	69	445	460	445	152	326	71
8	200	495	508	495	203	380	131	533	549	533	203	380	150
10	250	622	635	622	254	440	219	622	638	622	254	440	265
12	300	699	711	699	305	480	321	711	727	711	305	520	450
14	350	787	800	787	337	530	380	838	854	838	337	540	640
16	400	864	876	864	387	580	560	864	879	864	387	588	850
18	450	978	991	978	438	618	630	978	994	978	438	670	1030
20	500	978	991	978	489	657	770	1016	1035	1016	489	720	1330
24	600	1295	1308	1295	591	760	960	1346	1368	1346	591	850	1950
26	650	1295	-	1295	633	840	1250	1346	1372	1346	633	920	2300
28	700	1448	-	1448	684	920	1580	1499	1524	1499	684	1150	2600
30	750	1524	-	1524	735	980	1950	1594	1619	1594	735	1260	3200

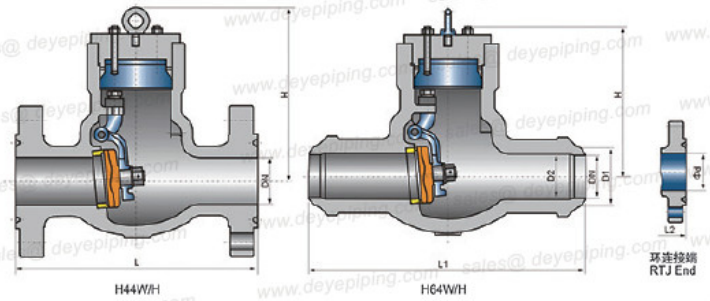

美标600Lb～2500Lb旋启式止回阀 Class600～Class2500 Cast Steel Swing Check Valve

规格Size		Class 600						Class 900					
		尺寸Dimensions(mm)					重量	尺寸Dimensions(mm)					重量
NPS	DN	L			d	H	Weight (kg)	L			d	H	Weight (kg)
		RF	RTJ	BW				RF	RTJ	BW			
2	50	292	295	292	51	170	28	368	371	368	51	200	48
21/2	65	330	333	330	64	178	40	419	422	419	64	220	75
3	80	356	359	356	76	246	68	381	384	381	76	280	95
4	100	432	435	432	102	290	117	457	460	457	102	320	135
5	125	508	511	508	127	320	155	559	562	559	127	360	200
6	150	559	562	559	152	360	192	610	613	610	152	400	264
8	200	660	664	660	203	430	340	737	740	737	203	480	424
10	250	787	791	787	254	502	515	838	841	838	254	560	730
12	300	838	841	838	305	554	750	965	968	965	305	632	1070
14	350	889	892	889	337	595	890	1029	1038	1029	322	680	1180
16	400	991	994	991	387	680	1303	1130	1140	1130	373	780	1790
18	450	1092	1095	1092	438	778	1600	1219	1232	1219	423	880	2500
20	500	1194	1200	1194	489	970	2150	1321	1334	1321	471	1050	3080
24	600	1397	1407	1397	591	1100	3200	1549	1568	1549	522	1200	4600

规格Size		Class 1500						Class 2500					
		尺寸Dimensions(mm)					重量	尺寸Dimensions(mm)					重量
NPS	DN	L			d	H	Weight (kg)	L			d	H	Weight (kg)
		RF	RTJ	BW				RF	RTJ	BW			
2	50	368	371	368	51	210	48	451	454	451	42	230	68
21/2	65	419	422	419	64	240	75	508	514	508	52	260	100
3	80	470	473	470	76	303	120	578	584	578	62	330	165
4	100	546	549	546	102	340	180	673	683	673	87	370	260
5	125	673	676	673	127	380	294	794	807	794	96	410	440
6	150	705	711	705	144	430	385	914	927	914	131	460	580
8	200	832	841	832	192	500	634	1022	1038	1022	179	530	970
10	250	991	1000	991	239	590	1140	1270	1292	1270	223	620	1700
12	300	1130	1146	1130	287	660	1650	1422	1445	1422	265	690	2600
14	350	1257	1276	1257	315	710	2000	-	-	-	-	-	-
16	400	1384	1407	1384	360	820	2700	-	-	-	-	-	-

Application:

Valve is a universal component industrial product that is widely used in many industries, such as petroleum, petrochemical, chemical, metallurgy, power, water conservancy, urban construction, machinery, coal, food, Sea water, 0il Refining, environment, energy.
Steam, LPG.

Reference Standard:

API 600: cast carbon and alloy valves
API 603: stainless steel valves
API 602/BS 5352: forged valves
API 6D: slab and through conduit valves for pipelines
API 598 and BS EN 12266-1: valves testing
ASME B16.10: face to face dimensions for valves
ASME B16.5 and ASME B16.47: flanged connections
ASME B16.25: butt weld connections design
ASME B16.34: Pressure ratings pressure and temperature ratings by material grade
ISO 7-1:1994, Pipe threads where pressure-tight joints are made on the threads — Part 1: Dimensions, tolerances and designation.
ISO 4200:1991, Plain end steel tubes, welded and seamless — Dimensions.
ISO 5208:1993, Industrial valves — Pressure testing of valves.
ISO 5209:1977, General purpose industrial valves — Marking.
ISO 5210:1991, Industrial valves — multi-turn valve actuator attachments.
ISO 5752: — 1), Metal valves for use in flanged pipe systems — Face-to-face and center-to-face dimensions.
ISO 6708:1995, Pipework components — Definition and selection of DN (nominal size) .
ISO 7005-1:1992, Metallic flanges — Part 1: Steel flanges.
ISO 7268:1983, Pipe components — Definition of nominal pressure.
ASME B1.1:1989, Unified inch screw threads (UN and UNR thread form) .
ASME B1.5:1988 (R1994), Acme screw threads.
ASME B1.8:1988 (R1994), Stub Acme screw threads.
ASME B1.12:1987 (R1992), Screw threads — Class 5 interference — Fit thread.
ASME B1.20.1:1983 (R1992), Pipe threads, general purpose (inch) .
ASME B16.5:1996, Pipe flanges and flanged fittings.

ASME B16.34:1996, Valves — Flanged, threaded and welding end.
ASME B18.2.2:1987 (R1993), Square and hex nuts (inch series) .
ASTM A193:1996, Specification for alloy steel and stainless-steel bolting materials for high-temperature service.
ASTM A194:1996, Specification for carbon and alloy steel nuts for bolts for high-pressure and high-temperature service.
ASTM A307:1994, Specification for carbon steel bolts and studs, 60 000 psi tensile strength.
MSS SP-55:1985 (R1990), Quality standard for steel castings, visual surface examination.
1) To be published. (Revision of ISO 5752:1982)

SHIJIAZHUANG DEYE PIPING INDUSTRY CO., LTD Pipefittings Department)

+8613292824811 sales@deyepiping.com piping-industry.com

No. 368 Youyi St. Shijiazhuang, Hebei, China